US011783249B2

(12) **United States Patent**
Mignano

(10) **Patent No.: US 11,783,249 B2**
(45) **Date of Patent: Oct. 10, 2023**

(54) **SYSTEM FOR CONTROLLING AND MANAGING A CHAIN OF ENERGY PRODUCTS AND RELATED PROCESS**

(71) Applicants: **SGM ENERGY S.R.L.**, Morcone (IT); **Vincenzo Mignano**, Morcone (IT)

(72) Inventor: **Vincenzo Mignano**, Morcone (IT)

(73) Assignees: **Vincenzo Mignano**, Morcone (IT); **SGM ENERGY S.R.L.**, Morcone (IT)

(*) Notice: Subject to any disclaimer, the term of this patent is extended or adjusted under 35 U.S.C. 154(b) by 0 days.

(21) Appl. No.: **17/264,428**

(22) PCT Filed: **Jul. 25, 2019**

(86) PCT No.: **PCT/IT2019/000059**
§ 371 (c)(1),
(2) Date: **Jan. 29, 2021**

(87) PCT Pub. No.: **WO2020/026278**
PCT Pub. Date: **Feb. 6, 2020**

(65) **Prior Publication Data**

US 2021/0312364 A1 Oct. 7, 2021

(30) **Foreign Application Priority Data**

Aug. 2, 2018 (IT) 102018000007756

(51) **Int. Cl.**
G06Q 40/04 (2012.01)
G06Q 50/04 (2012.01)
(Continued)

(52) **U.S. Cl.**
CPC ***G06Q 10/06313*** (2013.01); ***G06F 9/542*** (2013.01); ***G06F 16/25*** (2019.01);
(Continued)

(58) **Field of Classification Search**
CPC G06Q 10/06313; G06Q 10/06315; G06Q 40/123; G06Q 40/04; G06Q 30/018;
(Continued)

(56) **References Cited**

U.S. PATENT DOCUMENTS

8,160,952 B1 * 4/2012 Fell G06Q 40/04 705/26.1
8,583,520 B1 * 11/2013 Forbes, Jr. G06Q 40/00 700/286
(Continued)

FOREIGN PATENT DOCUMENTS

CN 101388092 A * 3/2009

OTHER PUBLICATIONS

Fera et al. "Production Scheduling Approaches for Operations Management" (2013) (https://www.intechopen.com/chapters/43001) (Year: 2013).*

Primary Examiner — Sujay Koneru
(74) *Attorney, Agent, or Firm* — Maschoff Brennan

(57) **ABSTRACT**
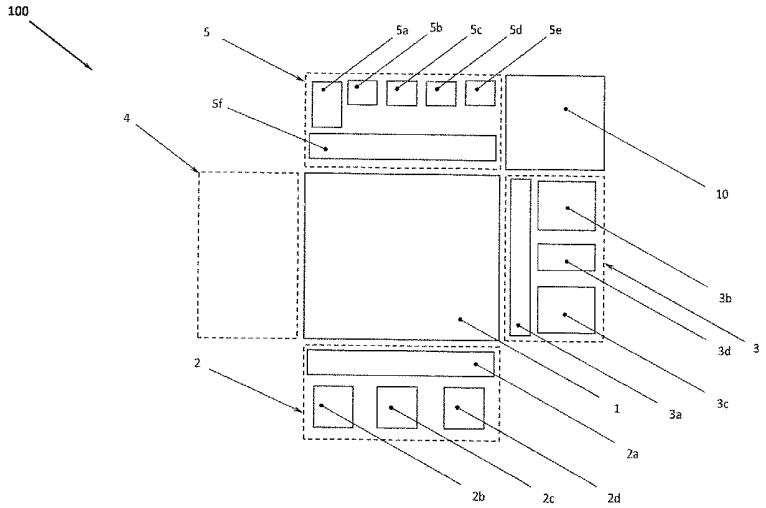
A system for controlling and managing a chain of energy products designed to computerize and digitalize a plurality of steps of the chain includes a database centralized and customized depending on implementation needs, required by a user, and designed to collect data related to the steps of the chain. A managing module is designed to perform an analysis of functional information implementing procedures aimed to computerize the chain of energy products. A plurality of operating areas is designed to be interfaced through communication interfaces with the database and with the managing module and to process functional information from data collected from the database and supply them to the managing module. An operating system controls
(Continued)